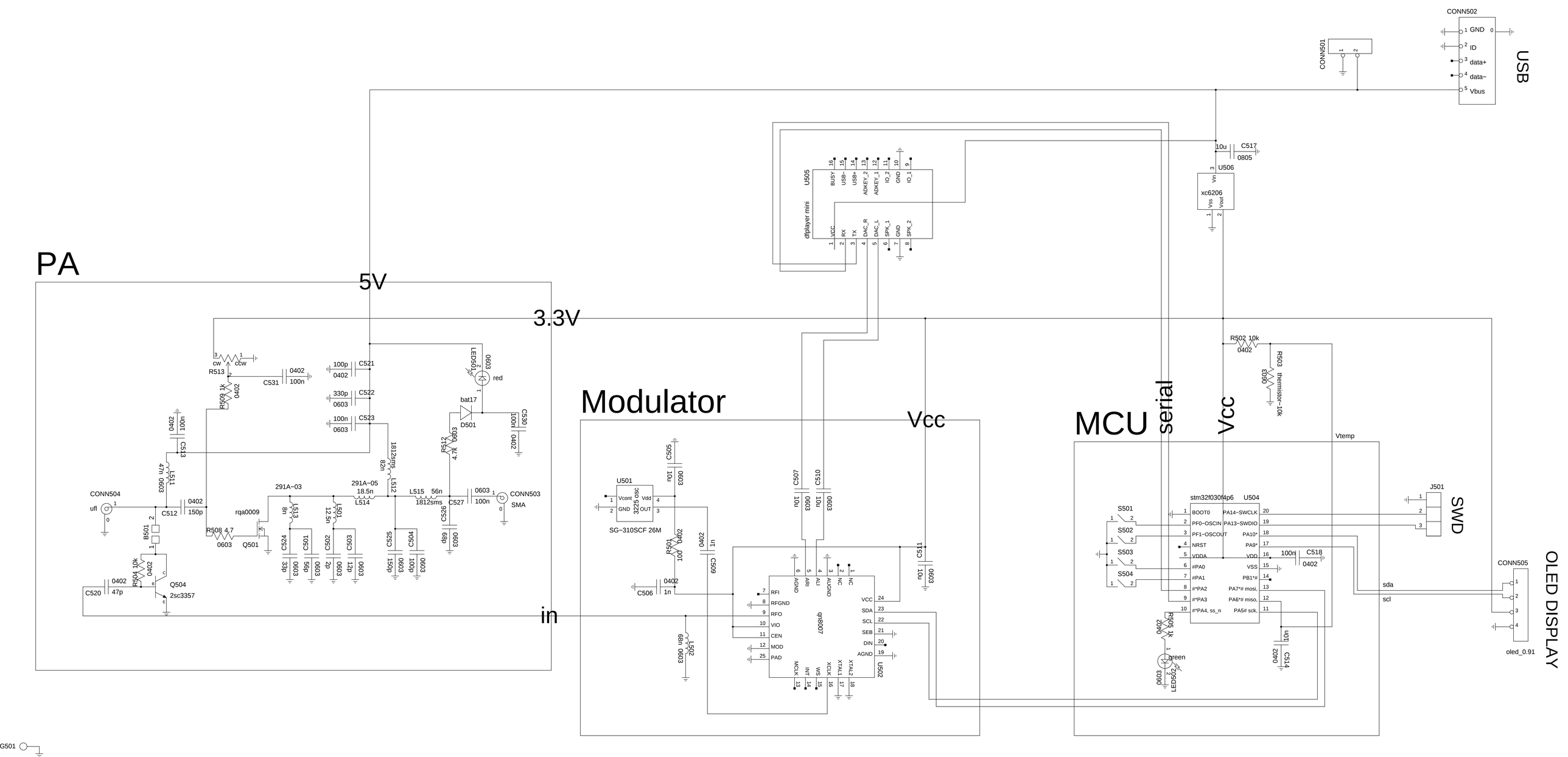
PA
5V
3.3V
Modulator
Vcc
MCU
serial
Vcc
USB
SWD
OLED DISPLAY
in
CONN502
GND
ID
data+
data−
Vbus
CONN501
U505
dfplayer mini
BUSY
USB−
USB+
ADKEY_2
ADKEY_1
IO_2
GND
IO_1
VCC
RX
TX
DAC_R
DAC_L
SPK_1
GND
SPK_2
10u
C517
0805
U506
xc6206
Vin
Vss
Vout
R502 10k
0402
R503 thermistor−10k
0603
Vtemp
CONN504
ufl
C512
0402
150p
R513
cw
ccw
C531
0402
100n
R509 1k
0402
100p
C521
0402
330p
C522
0603
100n
C523
0603
LED501
0603
red
bat17
D501
C530
100n
0402
R512
4.7k
0603
C513
100n
0402
L511
47n
0603
1812sms
82n
L512
291A−03
291A−05
18.5n
L514
L515
56n
1812sms
C527
0603
100n
CONN503
SMA
rqa0009
Q501
R508 4.7
0603
B501
R504 10k
0402
C520
0402
47p
Q504
2sc3357
C524
33p
L513
8n
C501
56p
0603
L501
12.5n
C502
2p
0603
C503
12p
0603
C525
150p
0603
C504
100p
0603
C526
68p
0603
U501
SG−310SCF 26M
3225 osc
Vcont
Vdd
GND
OUT
C505
10u
0603
R501
10k
0402
C506
1n
0402
C509
1n
0402
L502
68n
0603
C507
10u
0603
C510
10u
0603
C511
10u
0603
gm8007
U502
RFI
RFGND
RFO
VIO
CEN
MOD
PAD
AGND
ARI
AU
AUGND
NC
VCC
SDA
SCL
SEB
DIN
AGND
MCLK
INT
WS
XCLK
XTAL1
XTAL2
stm32f030f4p6
U504
BOOT0
PF0−OSCIN
PF1−OSCOUT
NRST
VDDA
#PA0
#PA1
#*PA2
#*PA3
#*PA4, ss_n
PA14−SWCLK
PA13−SWDIO
PA10*
PA9*
VDD
VSS
PB1*#
PA7*# mosi,
PA6*# miso,
PA5# sck,
S501
S502
S503
S504
100n
C518
0402
10Tl
C514
20p4
R505 1k
0402
green
LED502
0603
J501
sda
scl
CONN505
oled_0.91
G501